| REV. | DATE | ECN NO. | MODIFICATION | APPROVER |
|---|---|---|---|---|
| A | 2006/04/01 | / | NEW | Vicky |

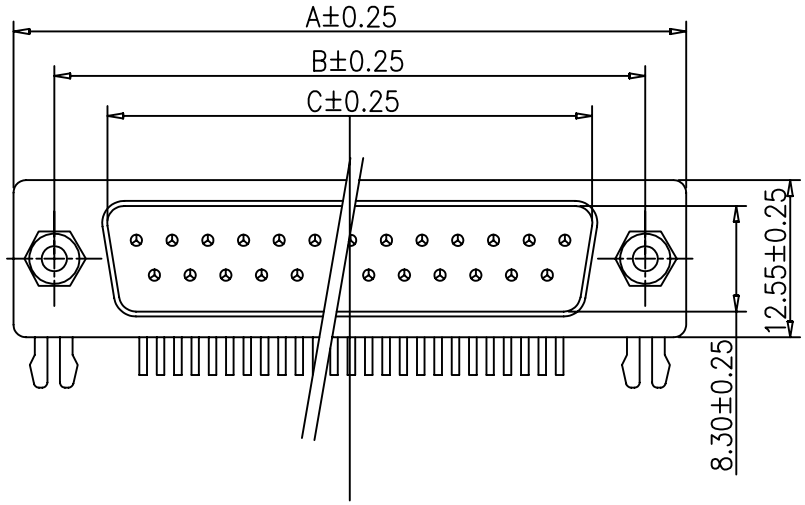


NOTE:

1. Electrical Performance:
   Voltage rating: 250V
   Current rating: 5AMP
   Contact resistance: 30mΩmax
   Insulation resistance: 1000MΩmin at 500V DC
   Withstanding voltage: 500V AC RMS for 1minute
   Operating Temperature: −55℃～105℃
2. Material:
   Plastic: PBT+30% G.F (UL94V−0)
   Terminal: Copper alloy
   Shell: SPCC, Nickel plated

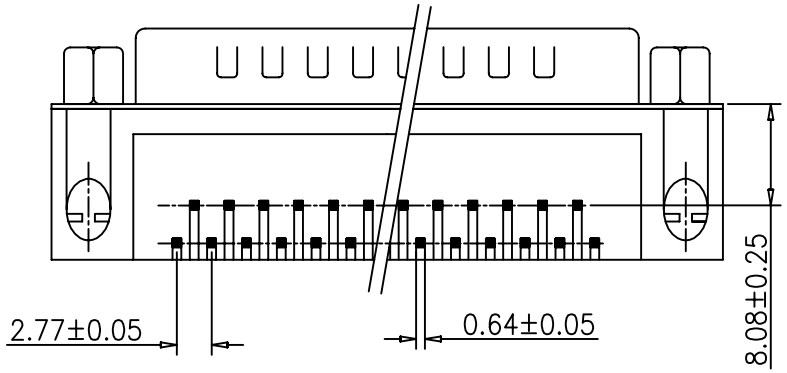


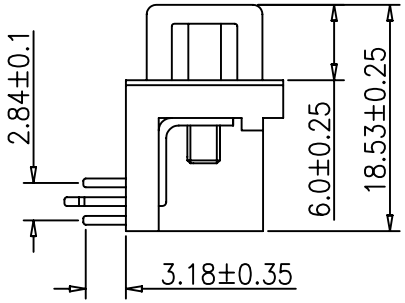


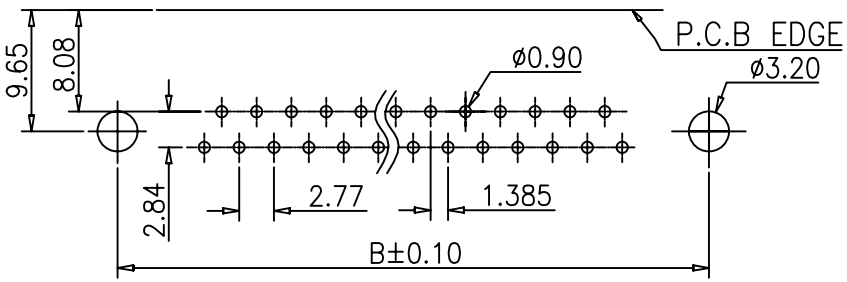


P.C.B LAYOUT

| | A | B | C |
|---|---|---|---|
| 09P | 30.81 | 24.99 | 16.92 |
| 15P | 39.14 | 33.32 | 25.25 |
| 25P | 53.04 | 47.04 | 38.96 |
| 37P | 69.50 | 63 50. | 55.42 |

| GENERAL TOLERANCE | | | |
|---|---|---|---|
| SELECT | ✓ | | |
| ON: TOL. | 1 | 2 | 3 |
| X.XXX | ±0.01 | ±0.05 | ±0.15 |
| X.XX | ±0.05 | ±0.13 | ±0.25 |
| X.X | ±0.15 | ±0.25 | ±0.50 |
| X. | ±0.25 | ±0.38 | ±1.00 |
| ANGLE | ±1° | | |

UNITS mm
MAT'L
FINISH
Q'TY

NAME: D−SUB

PART NO: DB**M−A02***

APPD: Vicky

CHKD: Emilia

DR: Doris

ATOM® 深圳市爱特姆科技有限公司 SHENZHEN ATOM TECHNOLOGY CO., LTD.

TITLE: D−SUB 8.08mm XP/M DIP 90° 双排 锁螺丝 黑胶

DWG NO. ATOM−A01291

| SCALE | SHEET | REV |
|---|---|---|
| 1:1 | 1/1 | A |