Revised Record								
	1.0	New issue	2017-03-02	3.0	Add silicon and UV glue diagram	2017-03-27		
	2.0	Add side view of PIN and change the thickness of LCD	2017-03-24					

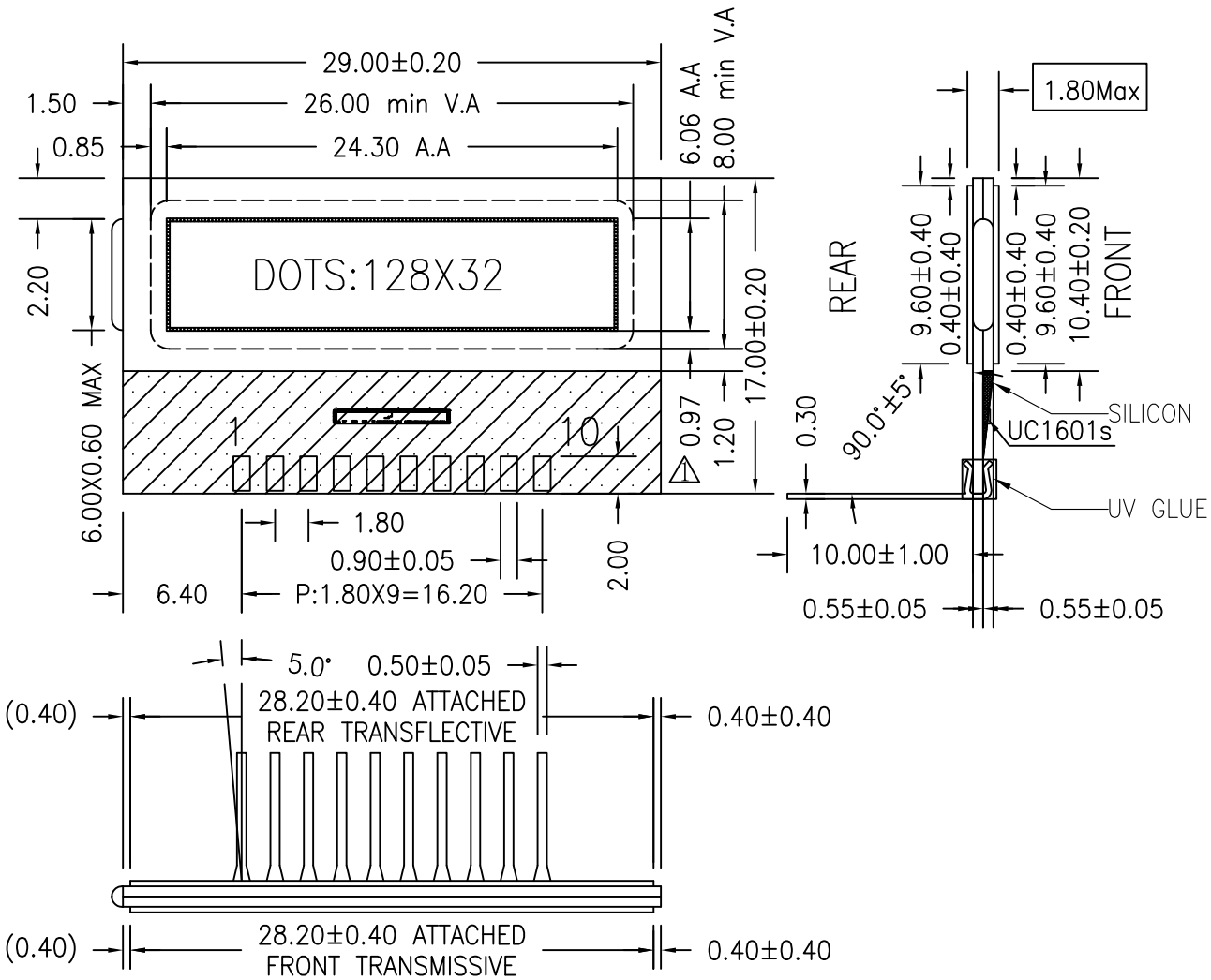

INTERFACE:

NO.	SYMBOL
1	VLCD
2	VB0+
3	VB0-
4	VB1-
5	VB1+
6	VSS
7	VDD
8	SDA
9	SCK
10	RST

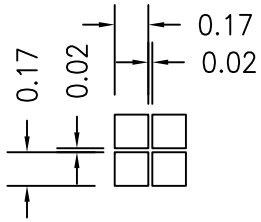

NOTES:

01.	DISPLAY TYPE:	FSTN/POSITIVE/TRANSFLECTIVE RoHS
02.	OPERATING VOLTAGE:	VLCD:6.0V, VDD:3.0V
03.	OPERATING TEMPERATURE:	−30°C~70°C
04.	STORAGE TEMPERATURE:	−30°C~85°C
05.	DRIVE MODE:	1/33 DUTY 1/6 BIAS
06.	VIEWING DIRECTION:	6:00
07.	DRIVE IC:	UC1601s
08.	CONNECTOR:	COG+PIN
09.	BACKLIGHT:	NONE
10.	CUSTOMER'S PART ID:	UNKNOWN

DESIGNED BY: BDT-15	RDX0048-GC-2	VERSION: 3.0
CHECKED BY: BDT-09		PAGE 1 OF 2
APPROVED BY: BDT-03		UNIT: mm
		DATE: 2017-03-27