REV.	DATE	ECN NO.	MODIFICATION	APPROVER
A	2014/04/13	/	NEW	Vicky
B	2017/08/10	RD00317081001	塑胶底部外观变更，详见B处	Vicky

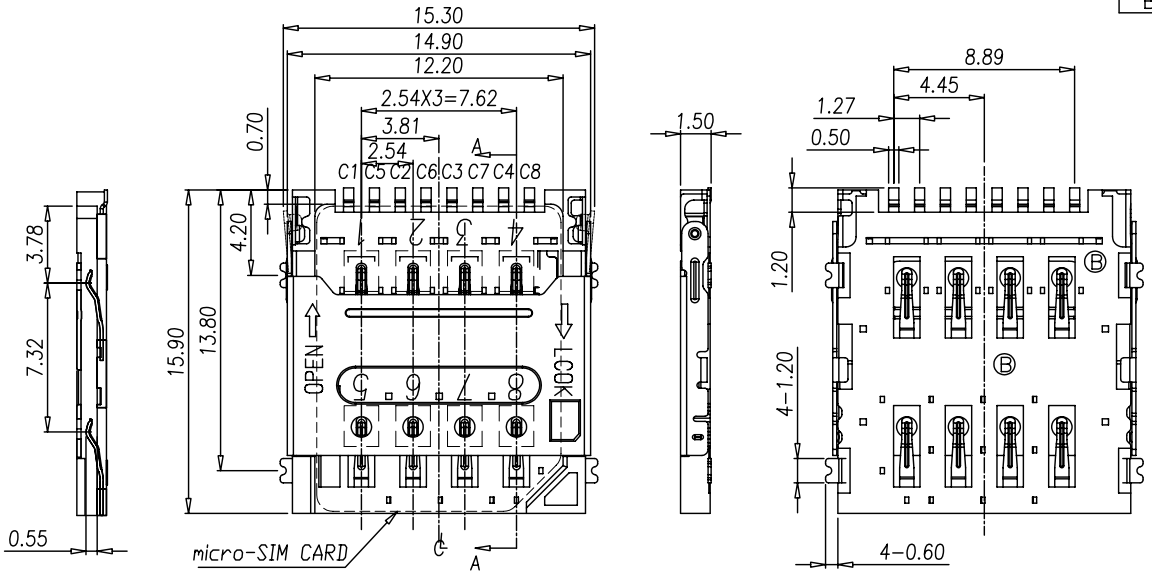

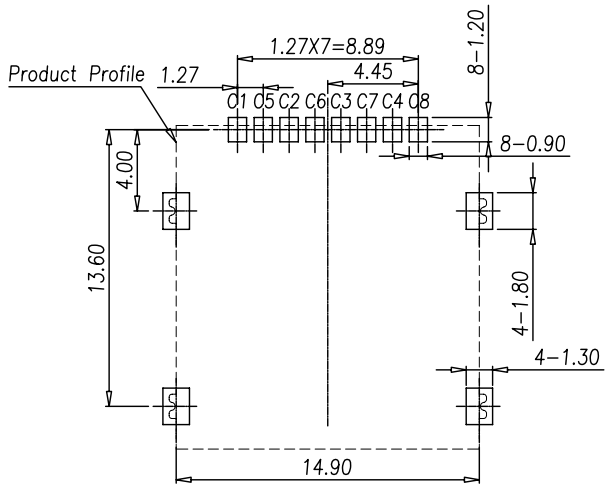

RECOMMENDED PCB LAYOUT
GENERAY TOLERANCE ±0.05

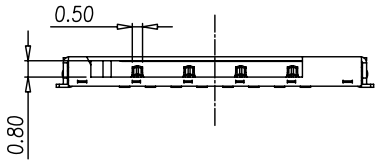

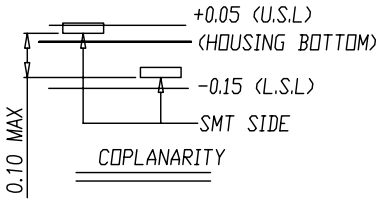

COPLANARITY

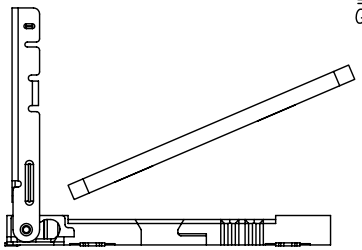

STEP 1 INSERT Micro-SIM CARD

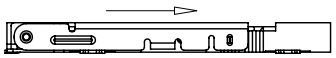

STEP 2 PUSH THE SHELL

STEP 3 FINISH

SIM CARD	
Pin No.	NAME
C1	VCC
C2	RST
C3	CLK
C4	RESERVED
C5	GND
C6	VPP
C7	I/O
C8	RESERVED

NOTES:

1. ELECTRICAL CHARACTERISTICS
   - 1-1. CONTACT RESISTANCE: 60 Milliohms Max
   - 1-2. INSULATION RESISTANCE: 1,000 Megohms Min.
   - 1-3. DIELECTRIC WITHSTANDING VOLTAGE: 500V AC FOR 1 MINUTE.
2. MECHANICAL CHARACTERISTICS
   - 2-1. OPERATION TEMPERATURE RANGE: -25°C~+70°C
   - 2-2. DURABILITY: 5000 CYCLES
3. MATERIAL:
   - 3-1. HOUSING: THERMOPLASTIC,UL94V-0
   - 3-2. TERMINAL: PHOSPHOR BRONZE,T=0.15
   - 3-3. SHELL: STAINLESS STEEL,T=0.15
4. FINISHED:
   - 4-1. TERMINAL: Ni PLATED UNDER,Au PLATED ON CONTACT AREA,G/F PLATED ON SOLDERTAIL
   - 4-2. SHELL: Ni PLATED UNDER,G/F PLATED ON SOLDERTAIL

GENERAL TOLERANCE			
SELECT	✓		
TOL. / ON:	1	2	3
X.XXX		±0.05	±0.15
X.XX	±0.20	±0.13	±0.25
X.X	±0.30	±0.25	±0.50
X.		±0.38	±1.00
ANGLE	±2°		

UNITS mm
MAT'L
FINISH
Q'TY

NAME: MICRO SIM
PART NO: SI33C-03200
APPD: Vicky
CHKD: Doris
DR: Iris

ATOM® 深圳市爱特姆科技有限公司 SHENZHEN ATOM TECHNOLOGY CO., LTD.

TITLE: MICRO SIM CARD 8P H=1.5mm 掀盖式

DWG NO. ATOM-A02588

SCALE	SHEET	REV
1:1	1/1	B