SIM68V reference design with passive antenna for best performance and increased immunity to jammers such as GSM

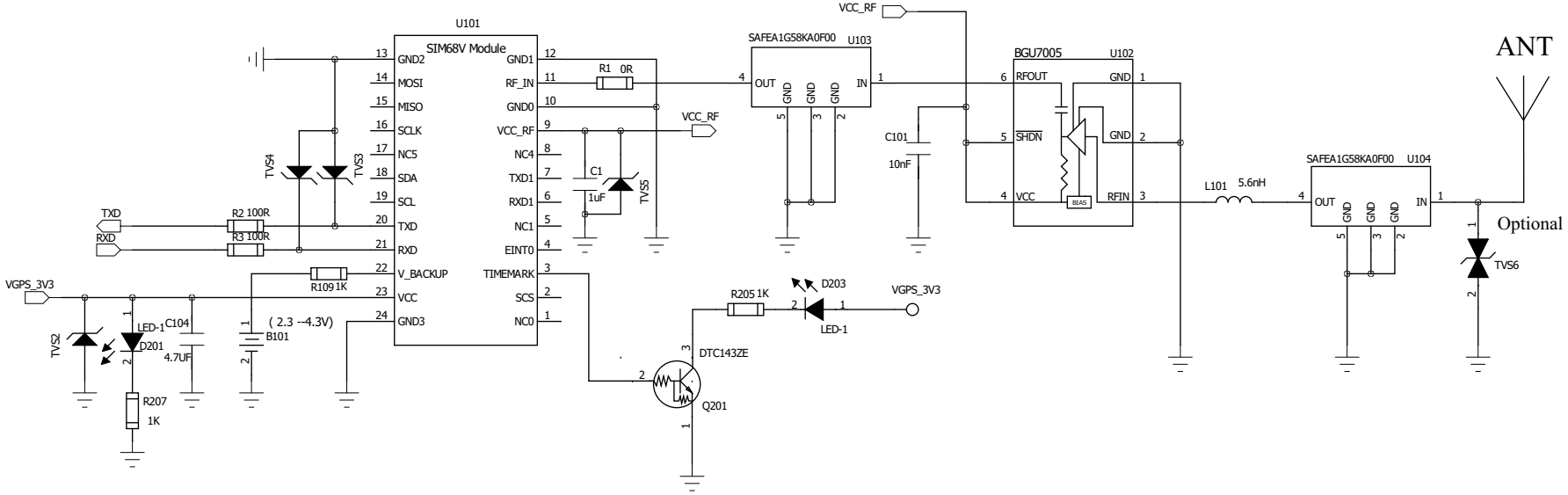

Note: 1. SIM68V does not support charging function to the backup battery,
if a rechargable backup battery used,customer should design the charge circuit.
2. The load-cap of TVS6 should be less than 2.5pF(Optional)

SIM Technology		
DRAWN BY	PROJECT SIM68V REF design	TITLE
CHECKED BY	SIZE	VER
	SHEET	